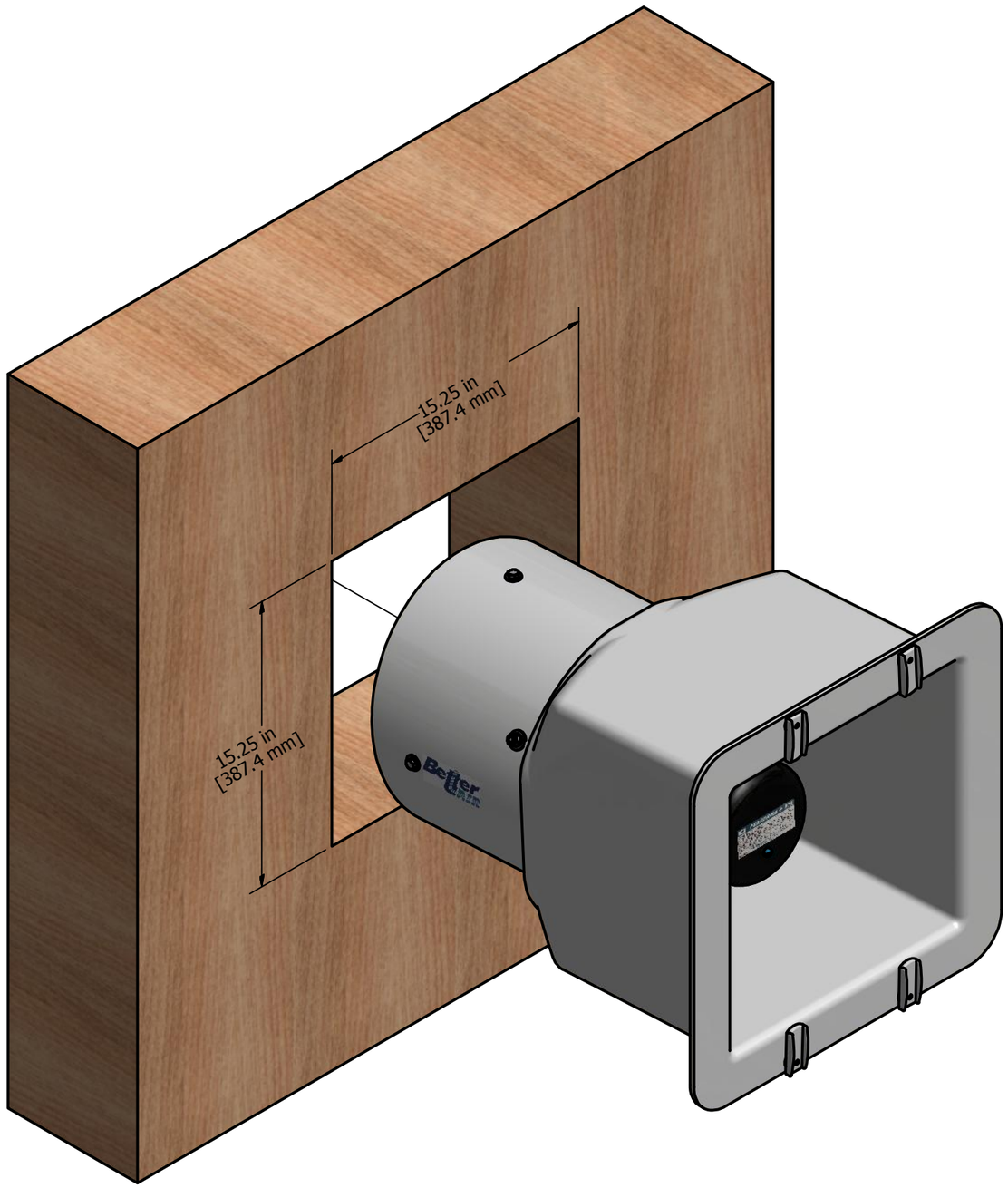

12" Wall Fan

Model #: LPF-1200
RSO: 15.25" x 15.25"
Motor: Leeson
HP: 1/4
Amps: 3.2/1.6
Volts: 110/220
CFM @ .05 SP: 1725

PROPRIETARY AND CONFIDENTIAL

THE INFORMATION CONTAINED IN THIS DOCUMENT IS PROPRIETRY TO BETTER AIR MFG AND IS NOT TO BE COPIED OR TRANSERRED WITHOUT THE WRITTEN PREMISSION OF BETTER AIR MFG

DRAWN	Matthew	1/9/2013	
CHECKED			
QA			
MFG			
APPROVED			
SHEET SIZE			
DIMENSION	inch (mm)		
THICKNESS			

MacGregor, MB, Canada
Box 490, R0H 0R0
Ph. (204) 252-2333 Fax (204) 252-2928
www.betterair.ca

DESCRIPTION: 12" Wall Fan - Leeson

PART NO.: LPF-1200 | REV: 1

SCALE: NTS | MATERIAL:

PARTS LIST				
ITEM	QTY	PART NUMBER	DESCRIPTION	MATERIAL
1	1	BA-H-12	12" Plastic Housing	Polyethylene, High Density
2	1	FG-12	12" Wall Fan Guard	Generic
3	4	CP-100	Shutter Clip - Small	Polyethylene, High Density
4	4	YN49	Blind Rivit .1875 Dia - .75 Aluminum	Aluminum 6061
5	3	MPM-1036	Mount Arm Adapter	Nylon 6/6
6	3	XQ01	5/16-18 UNC - 1" Hex Bolt	Stainless Steel
7	3	XG17	5/16 - 18 - Hex Nut	Stainless Steel
8	3	BL32	5/16 Plain Washer	Stainless Steel
9	3	YF09	5/16 Helical Spring Lock Washer	Stainless Steel
10	3	CD00	1/4-28 UNF - 1" Hex Bolt	Stainless Steel
11	3	JK92	1/4 - 28 Hex Lock Nut	Stainless Steel
12	8	PM62	1/4 Plain Washer	Stainless Steel
13	4	XU51	1/4-20 UNC - 1" Hex Bolt	Stainless Steel
14	4	KE51	1/4 - 20 - Hex Nuts	Stainless Steel

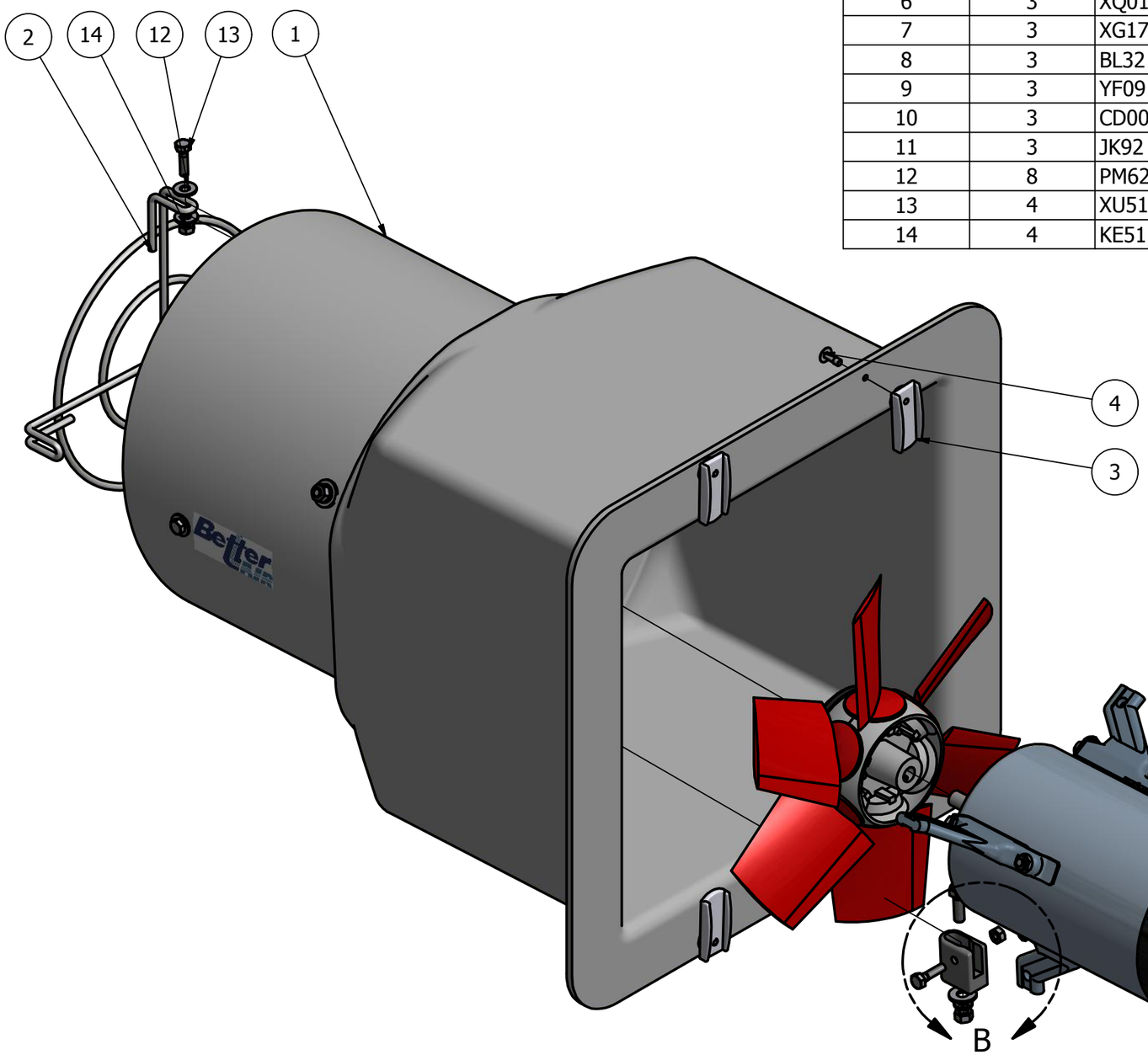

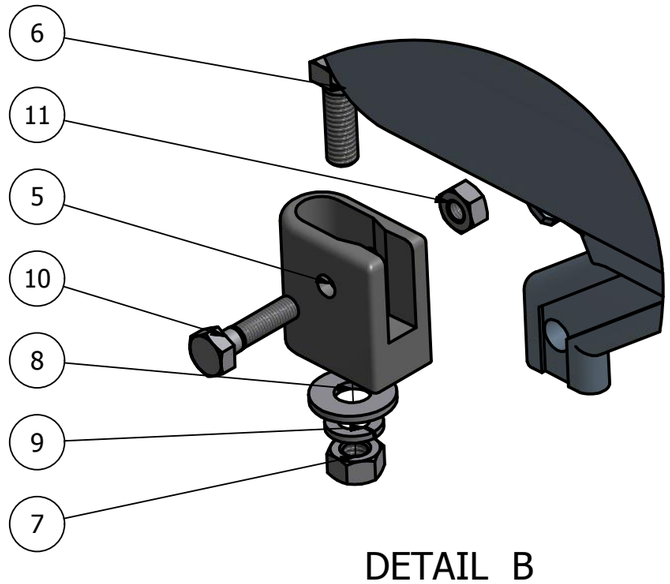

DETAIL B
SCALE 1 : 1.5

PROPRIETARY AND CONFIDENTIAL

THE INFORMATION CONTAINED IN THIS DOCUMENT IS PROPRIETRY TO BETTER AIR MFG AND IS NOT TO BE COPIED OR TRANSERRED WITHOUT THE WRITTEN PREMISSION OF BETTER AIR MFG

DRAWN	Matthew	1/9/2013
CHECKED		
QA		
MFG		
APPROVED		
SHEET SIZE		
DIMENSION	inch (mm)	
THICKNESS		

Better Air
MacGregor, MB, Canada
Box 490, R0H 0R0
Ph. (204) 252-2333 Fax (204) 252-2928
www.betterair.ca

DESCRIPTION: 12" Wall Fan

PART NO. LPF-1200 | REV 1

SCALE NTS | MATERIAL | SHEET 2 OF 4

PARTS LIST				
ITEM	QTY	PART NUMBER	DESCRIPTION	MATERIAL
15	1	L-905	Leeson Proform A+ Motor 1/4 HP Tube Mount	
16	3	MB3-12	3-Arm Mount Leeson 12"	Aluminum
17	3	QJ71	1/4-20 UNC - 0.75" - Carriage Bolt	Stainless Steel
18	3	YH01	1/4 -20 Hex Flange Nut	Stainless Steel
19	3	SN93	1/4-20 UNC - 0.75" Hex Bolt	Stainless Steel
20	3	XW63	1/4 Helical Spring Lock Washer	Stainless Steel

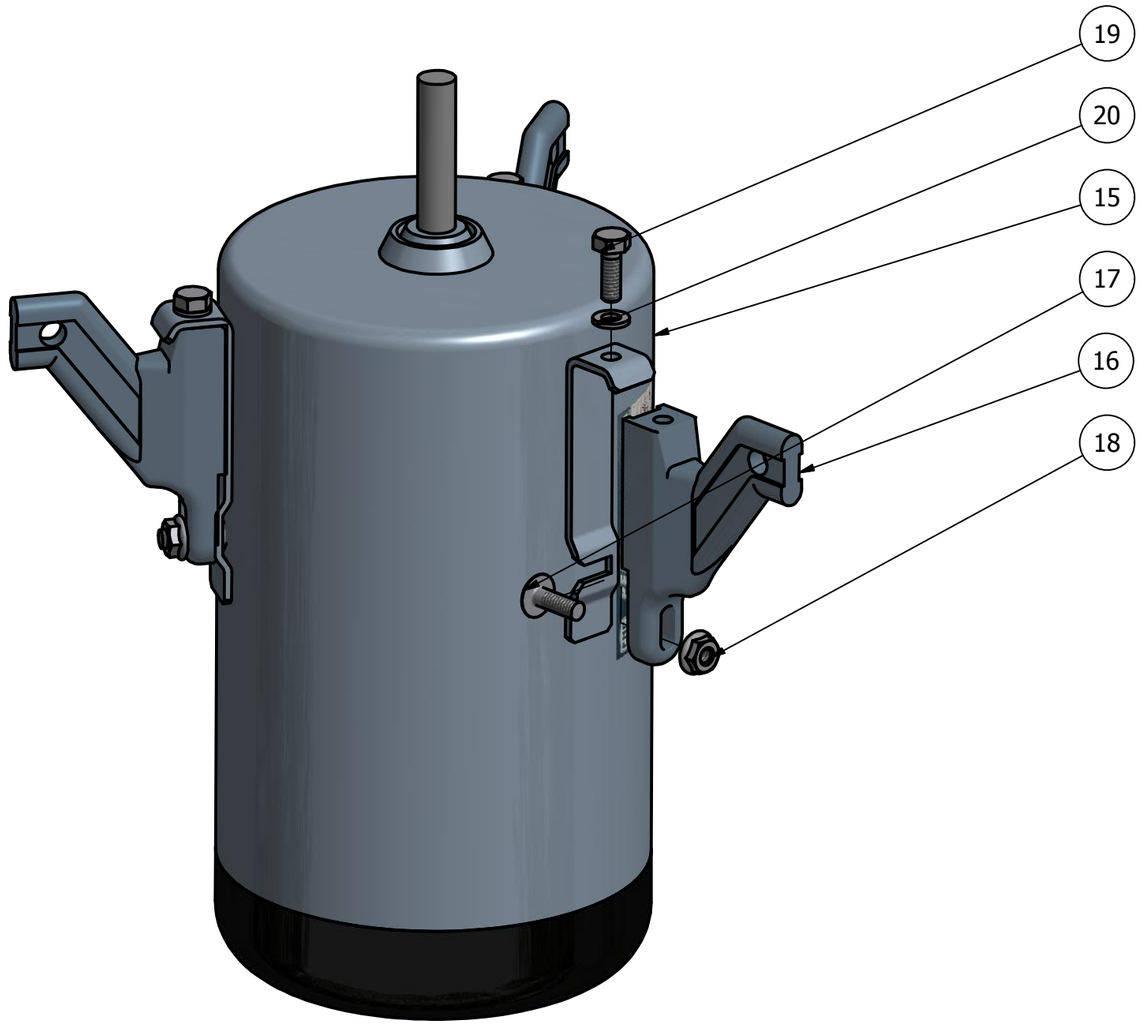

PROPRIETARY AND CONFIDENTIAL

THE INFORMATION CONTAINED IN THIS DOCUMENT IS PROPRIETRY TO BETTER AIR MFG AND IS NOT TO BE COPIED OR TRANSERRED WITHOUT THE WRITTEN PREMISSION OF BETTER AIR MFG

DRAWN	Matthew	1/9/2013
CHECKED		
QA		
MFG		
APPROVED		
SHEET SIZE		
DIMENSION	inch (mm)	
THICKNESS		

Better Air

MacGregor, MB, Canada
Box 490, R0H 0R0
Ph. (204) 252-2333 Fax (204) 252-2928
www.betterair.ca

DESCRIPTION: 12" Wall Fan

PART NO. LPF-1200 | REV 1

SCALE NTS | MATERIAL | SHEET 3 OF 4

PARTS LIST				
ITEM	QTY	PART NUMBER	DESCRIPTION	MATERIAL
21	6	AR-Red	Angle Ring 40 Degree	Polypropylene
22	6	FB-12F	12" Leeson Blade Fin	Polypropylene
23	1	HB-1020-Boss	Leeson Boss Hub - Small	Aluminum 6061
24	1	HB-1020-Counter	Leeson Counter Hub - Small	Aluminum 6061
25	1	HC-K	Dust Cap - Small	Polypropylene
26	3	PC61	M5 x 16 Hex Flange Head Tapping Screw	Stainless Steel
27	1	JM25	5/16 x 5/16 Hexagon Socket Set Screw	Stainless Steel

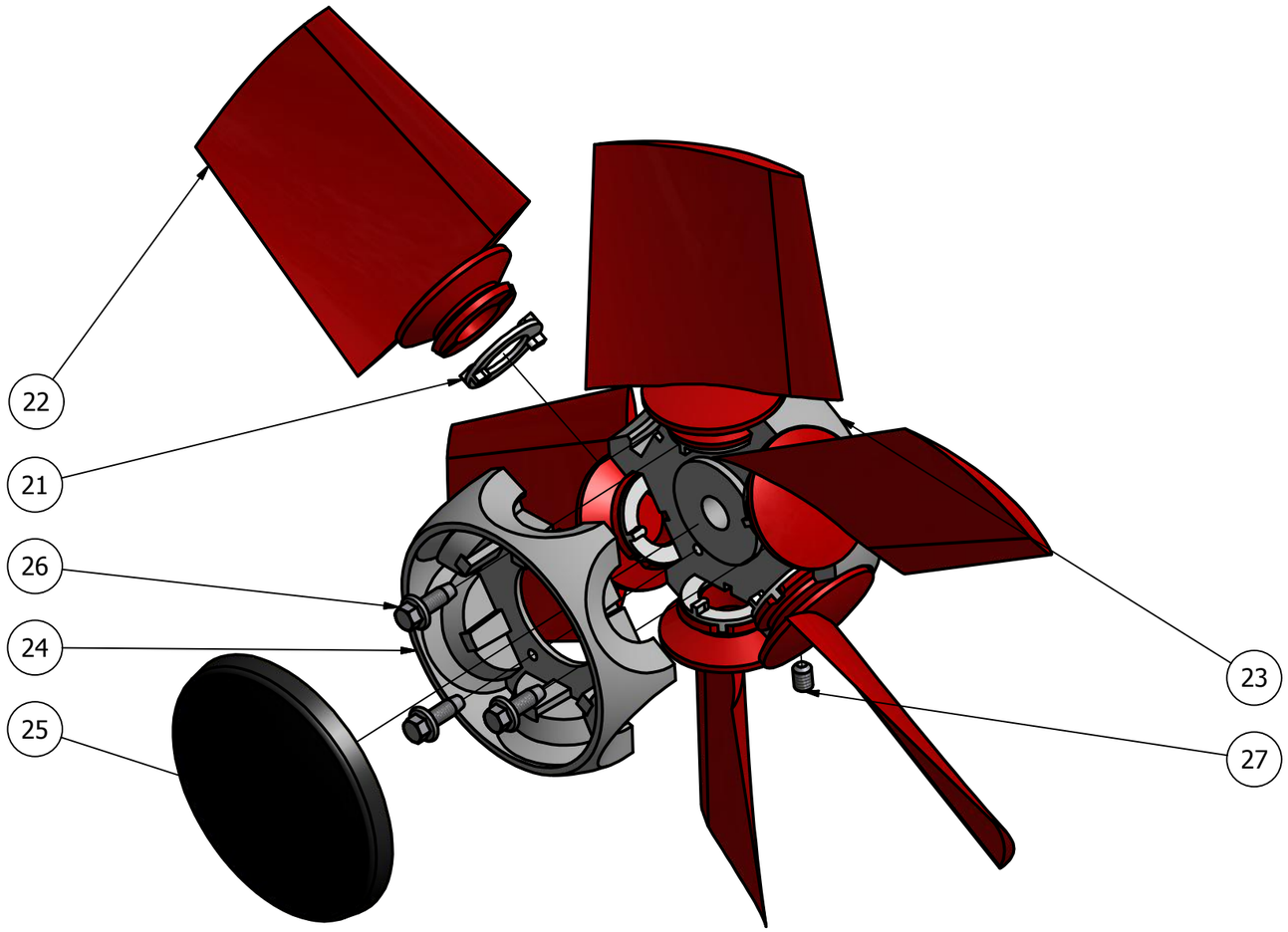

PROPRIETARY AND CONFIDENTIAL

THE INFORMATION CONTAINED IN THIS DOCUMENT IS PROPRIETRY TO BETTER AIR MFG AND IS NOT TO BE COPIED OR TRANSERRED WITHOUT THE WRITTEN PREMISSION OF BETTER AIR MFG

DRAWN Matthew	1/9/2013
CHECKED	
QA	
MFG	
APPROVED	
SHEET SIZE	
DIMENSION inch (mm)	
THICKNESS	

Better Air

MacGregor, MB, Canada
Box 490, R0H 0R0
Ph. (204) 252-2333 Fax (204) 252-2928
www.betterair.ca

DESCRIPTION: 12" Wall Fan

PART NO. LPF-1200 | REV 1

SCALE NTS | MATERIAL | SHEET 4 OF 4